FRA060/065/072
S E R I E S

60 ~ 72 Watts Single Output AC-DC Adaptor DeskTop Type

FEATURES

- Universal Input / Single Output
- OVP, OPP, Auto Recovery
- No load power consumption (@no load) < 0.075W
- Comply with EISA 2007 / DoE 6 & EU ErP and CoC 5

SPECIFICATIONS

Input Voltage..... 90~264VAC
Input Current..... 1.8A max.
Efficiency..... 87% typ. at full load *
Hold Up Time..... 10mS at Nominal Line
Output Voltage ..... 12 ~ 48VDC
Load Regulation..... ± 5% max.
Ripple & Noise..... 2% p-p max.
Withstand Voltage..... I/P-O/P: 3000 VAC (Class II)
I/P-O/P(V+): 4242 VDC, I/P-FG: 2121 VDC (Class I)
Operating Temperature..... .. -10℃ ~ +60℃
(derated linearly from 100% load @ 40℃ to 50% load @ 60℃)
Storage Temperature..... -20 to +85℃
Protections..... OCP , OVP , Over Power & Short Circuit
Safety Standard..... IEC/UL/EN 62368-1,CE, CB
EMC Standard..... (EN55032, CISPR22, FCC Part 15) class B,
EN61000-3-2, 3, EN61000-4-2, 3, 4, 5, 6, 8, 11, EN55035
Standard output connector..... DC barrel jack
Standard output cable / length..... UL1185 or UL1571 / 1.0M

* This data is taken after 30 mins. burn-in
All specifications are typical at nominal line, full load and 25℃, unless otherwise noted.

Model Number	Output Voltage (VDC)	Output Current (A)	Output Max. Watts	EFF. Level
FRA060-S12-x	12~15	5.0~4.0	60W	VI
FRA060-S15-x	15~18	4.0~3.33	60W	VI
FRA060-S24-x	18~24	3.33~2.5	60W	VI
FRA060-S36-x	30~36	2.0~1.67	60W	VI
FRA060-S48-x	40~48	1.5~1.25	60W	VI
FRA065-S24-x	18~24	3.6~2.7	65W	VI
FRA072-S24-x	24	3	72W	VI
FRA072-S36-x	30~36	2.4~2.0	72W	VI
FRA072-S48-x	40-48	1.8~1.5	72W	VI

Ordering Information:
x= AC Inlet Type Code
x= 4, IEC320 C14 x = 6, IEC320 C6 x = 8, IEC320 C8
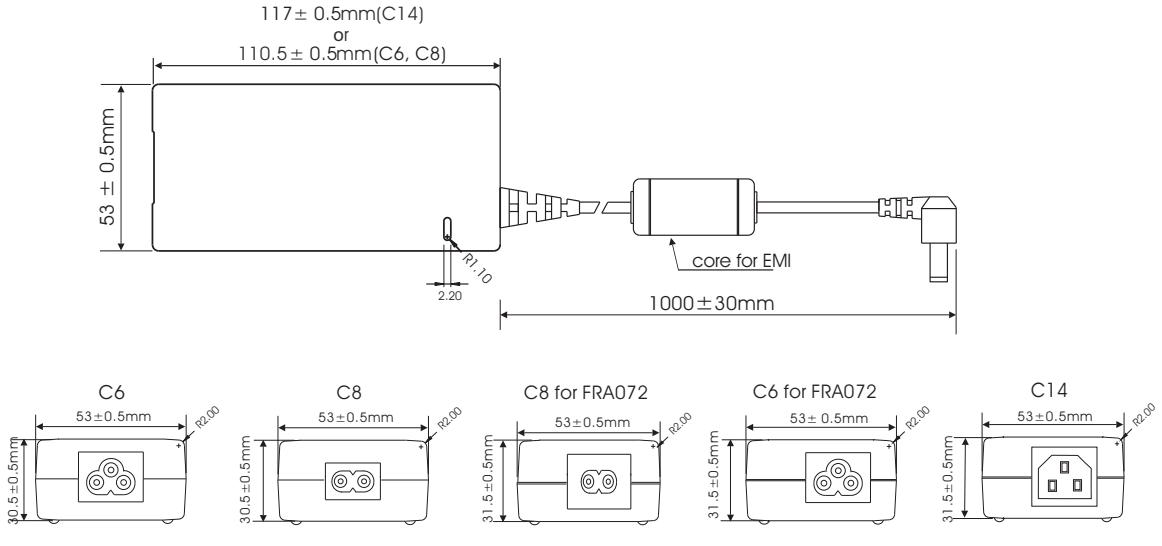
MECHANICAL DRAWING (Unit: mm)