REV	CONTENT	CHK	DATE
V0.0	CONTENT	CXL	20.05.11

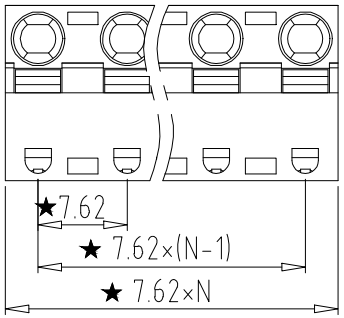

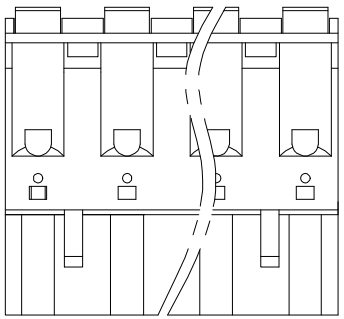

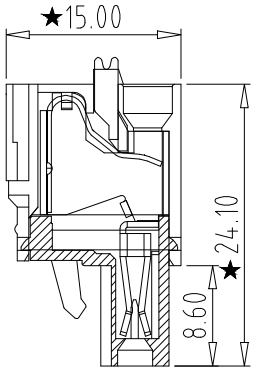

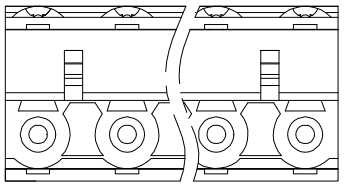

Electrical :

	UL	IEC
1.Rated Voltage :	300V	300V
2.Rated Current :	18A	18A
3.Wire Range:	30-12AWG	0.2-2.5mm²

4.Stripping Length : 7-8mm
5.Withstanding Voltage : AC1600V/1Min.
6.Operating Temperature : -40°C~+105°C
7.RoHS Compliance
8.Safty Approval : c UL us
9."★" is the key quality control point

2EGTKD - 508 -XXP - X X - XX
① ② ③ ④ ⑤ ⑥

①Sereies NO.

②Pitch: 5.08mm

③Poles
02 02Contacts
03 03Contacts
...
24 24Contacts

④ 1 Single Pitch
2 Double Pitch

⑤ Color: 1 Grey
2 Blue
3 Black
4 Green
5 Orange
6 Red
7 Transparent
8 Yellow
9 White

⑥ Customer Request: 00--Standard

BEC DISTRIBUTION LTD

ITEM	NAME OF PART	NO. OF PART	Q"TY	MATERIAL	NOTE
5	SHRAPNEL	XX	P	STAINLESS STEEL	SEE NOTE
4	CLAMP	XX	P	PHOSPHOR BRONZE	Tin Plated
3	BUTTON	XX	P	PA66 UL94V-0	SEE NOTE
2	COVER	XX	1	PA66 UL94V-0	SEE NOTE
1	HOUSING	XX	1	PA66 UL94V-0	SEE NOTE

DWG.	CXL	DATE	20.05.11	SIZE	A4	UNITS mm	SHEET/OF 1 / 1
CHK.		DATE		SCALE	1:1		
APP.		DATE		NAME	BC2EGTKD-7.62-06P		
ALTERNATIVES BY BEC				DWGNO.	XXXX		

Total Pitch Tolerances in mm									Nominal dimension range in mm									⊥		÷	—		//
over 0 to 30	over 30 to 53	over 53 to 70	over 70 to 90	over 90 to 115	over 115 to 150	over 150 to 250	over 250 to 350	over 350 to 500	over 0 to 30	over 30 to 53	over 53 to 70	over 70 to 90	over 90 to 115	over 115 to 150	over 150 to 200	over 200 to 250	over 250 to 320	over 0 to 10	over 10	all	over 0 to 100	over 100 to 150	over 150
±0.18	±0.20	±0.25	±0.3	±0.35	±0.44	±0.60	±0.70	±0.85	±0.20	±0.25	±0.30	±0.35	±0.44	±0.55	±0.70	±0.80	±0.90	0.2	0.3	0.3	0.2	0.3	0.5