SPECIFICATION

ITEM	SMD,INDUCTOR,4.7uH+-20%
FENG JUI P/N.	TP0705B-4R7M
ELECTRICAL REQUIREMENTS	INDUCTANCE: 4.7uH±20% DCR: 0.025Ω MAX. RATED CURRENT: 3.5A MAX.

*Rated current: Min(Isat, Irms), Isat: drop 10% typ., Irms: △T=40℃ typ. at 25℃ ambient.

TEST METHOD:

TEST EQUIPMENT	HIOKI3532 / CH1062 / CH1320
TEST FREQUENCY	7.96MHz, 0.25V

DIMENSION : (UNIT:mm)

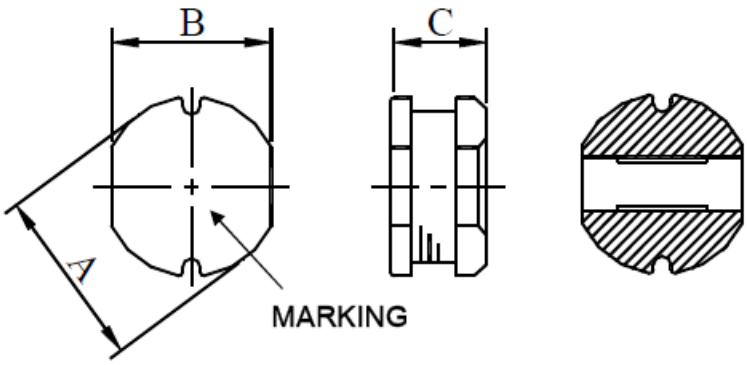

A= 7.80±0.30 m/m

B= 7.00±0.30 m/m

C= 5.00±0.50 m/m

MARKING: 4R7

SCHEMATICS:

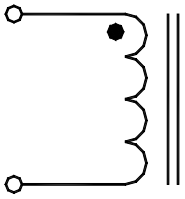

LAND PATTERNS:

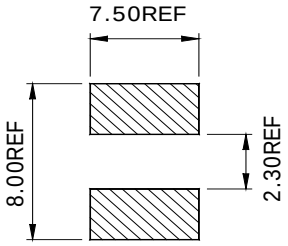

APPROVED	CHECKED	CORRECT	DESIGNED

FENG JUI TECHNOLOGY CO., LTD	FILE NO.	DATE	REV.	PAGE
		2020/01/17	A/0	1

FORM NO: QPTE01-F0101

ITEM :SMD,INDUCTOR,4.7uH+-20%

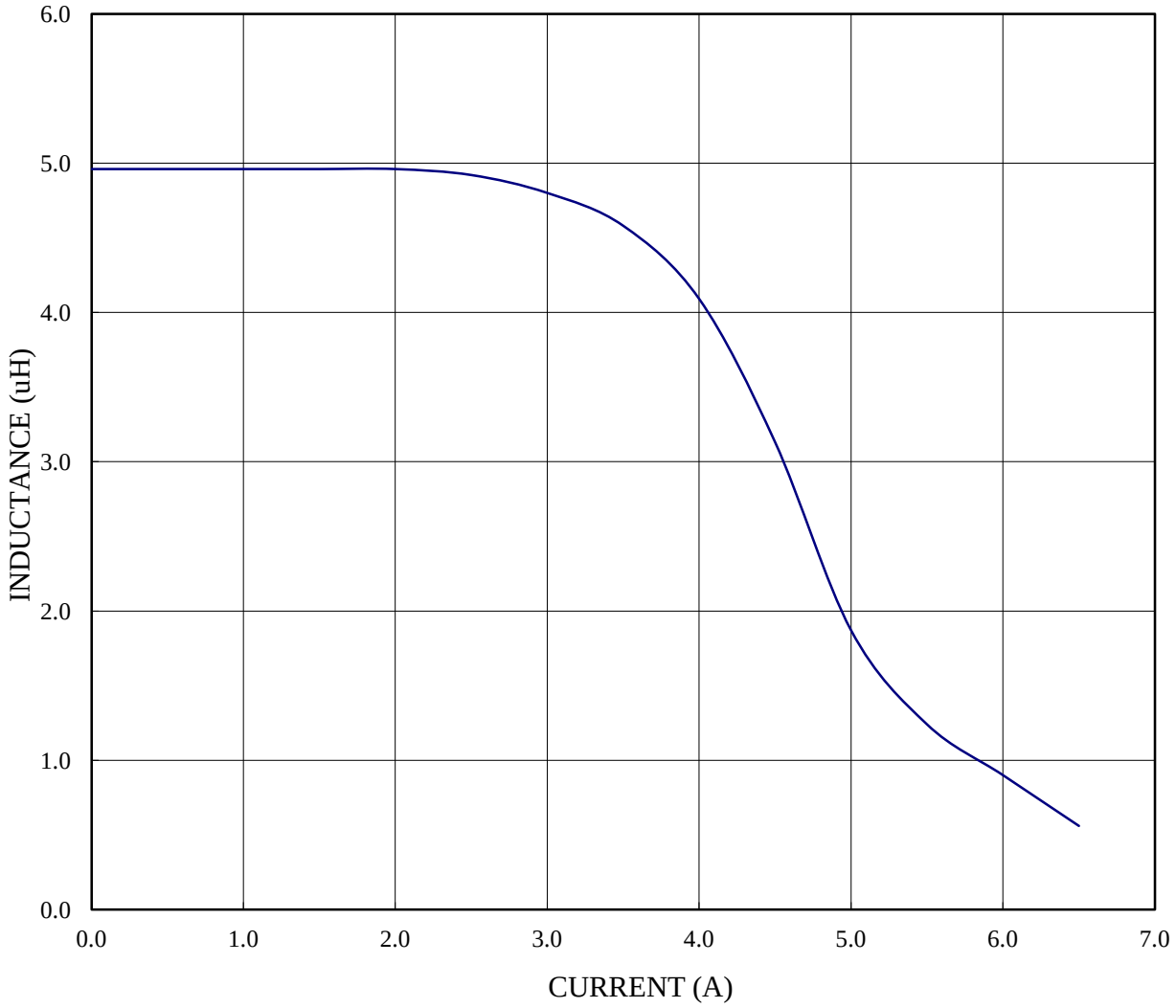

METER : CH 1062 / CH 1320

APPROVED	CHECKED	CORRECT	TEST

FENG JUI TECHNOLOGY CO., LTD	FILE NO.	DATE	REV.	PAGE
		2020/01/17	A/0	2

FORM NO: QPTE01-F0101

SPECIFICATION

PACKAGING QUANTITIES

TYPE	Pcs / REEL
TP0705B	1,000

REEL DIMENSIONS UNIT:mm

TYPE	W	D	C	T1	N	T2	E
UR-13	330±1.5	21.5+0.5/-0	13+0.5/-0.2	16.5+0.5/-0	100±1.5	21.4±0.4	2.00±0.5

Material: Paper,Palstic

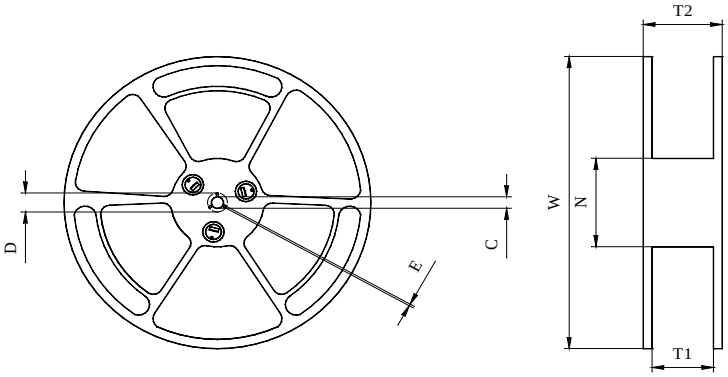

UNIT:mm

W1	16.00±0.3
I	1.75±0.1
F	7.5±0.1
P0	4.00±0.1
G	2.00±0.1
P1	12.00±0.1
C	8.10±0.1
t0	0.30±0.05
D	7.20±0.1
H	5.50±0.1
J	3.70±0.1

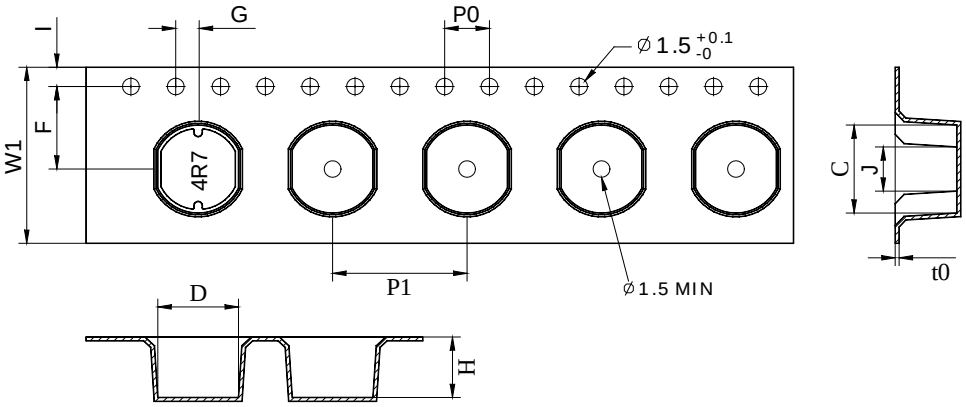

APPROVED	CHECKED	CORRECT	DESIGNED

FENG JUI TECHNOLOGY CO., LTD	FILE NO.	DATE	REV.	PAGE
		2020/01/17	A/0	3

FORM NO: QPTE01-F0101

RELIABILITY TEST

1.Operating temperature range

-40 TO + 105℃(Includes temperature when the coil is heated)

2. External appearance

On visual inspection, the coil has no external defects.

3. Terminal strength

After soldering. Between copper plate and terminals of coil. Push in two directions of X.Y withstanding at below conditions.

Terminal should not peel off. (refer to figure at right)

5. 0N 60 sec.

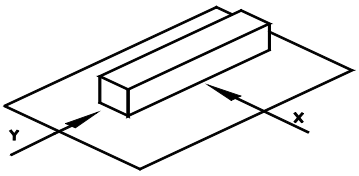

Figure 1

4. Insulating resistance.

Over 100MΩ at 100V D.C. between coil and core.

5. Dielectric strength

No dielectric breakdown at 100V D.C. for 1 minute between coil and core.

6. Temperature characteristics

Inductance coefficient (0~2,000)x10^{-6}/℃(-25~+80℃ degree Celsius)

inductance deviation within±5.0%, after 96 hours

7. Humidity characteristics(Moisture Resistance)

Inductance deviation within ±5%, after 96 hours in 90~95% relative humidity at 40 ±2℃ and 1 hour drying under normal condition.

8. Vibration resistance

Inductance deviation within ±5%, after vibration for 1 hour. In each of three orientations at sweep vibration (10~55~10 Hz) with 1.5mm P-P amplitudes.

9. Shock resistance

Inductance deviation within ±5%, after being dropped once with 981m/s^2 (100G) shock attitude upon a rubber block method shock testing machine, in three different orientations.

10. Resistance to Soldering Heat: 260℃, 10 seconds(See attached recommend reflow)

11. Storage environment

Storage condition: Temperature Range: 0℃ ~ 35℃ ；-40℃ ~ 105℃ (after PCB)

Humidity Range: 50% ~ 70% RH

Use components within 12 months. If 12 months or more have elapsed, check solderability before use.

APPROVED	CHECKED	CORRECT	DESIGNED

SPECIFICATION

GENERAL CHARACTERISTICS

Lead-free heat endurance test

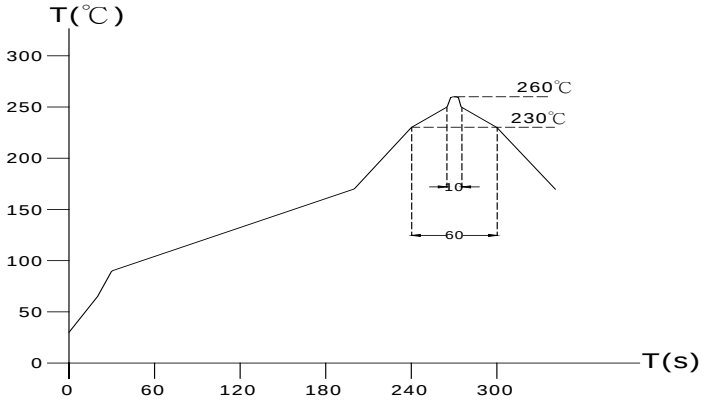

※The test should be made under the conditions according to the chart,
after the test it is kept for 2hours under the normal temperature and humidity.
Then,no mechanical and electrical defect should be found out.

※The reflow test can be done twice,but the interval should be more than one hour under the normal conditions.

※The reflow test conditions are based on the testing instruments available in our company.

Lead-free the recommended reflow condition

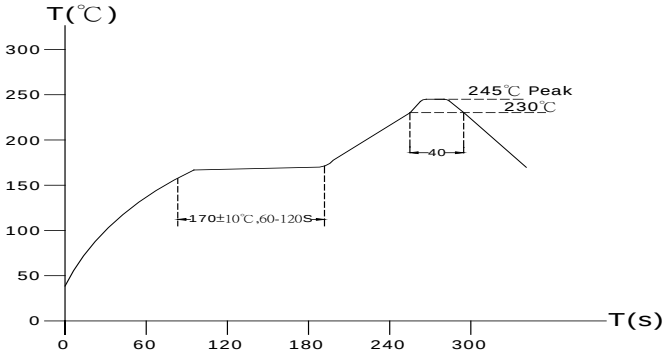

※The reflow condition recommended above is according to the machine used bour company.
Big differences will arise as a result of the type of maching ,reflow conditions,method,etc used.
Hence,before setting up your reflow conditions,plase confirm with the above.

APPROVED	CHECKED	CORRECT	DESIGNED