10/100 Base-T RJ45 1XN Tab-Down Jack With Magnetic Module

Coilmaster Electronics Co., Ltd.

PART NUMBERING SYSTEM

RJ32	—	X6201	—	X	—	X	—	LF
Type		Model		Mechanical		LED table		Lead Free

(1) RJ32 Series Mechanical :

A	With LED and EMI-Finger
B	With LED and Non EMI-Finger
C	Without LED with EMI-Finger
D	Without LED and EMI-Finger

RoHS Compliant

(2) LED ordering options :

LED Code	LED COLOR		LED POLARITY
	LEFT	RIGHT	
A	Y	G	9, 10, 12, 11
B	G	Y	
C	G	G	
D	Y	G	9, 10, 11, 12
E	G	Y	
F	G	G	

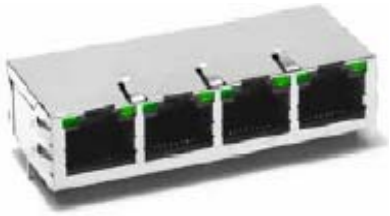

SHAPES AND DIMENSIONS

A(1xX, X=2,4,6,8)

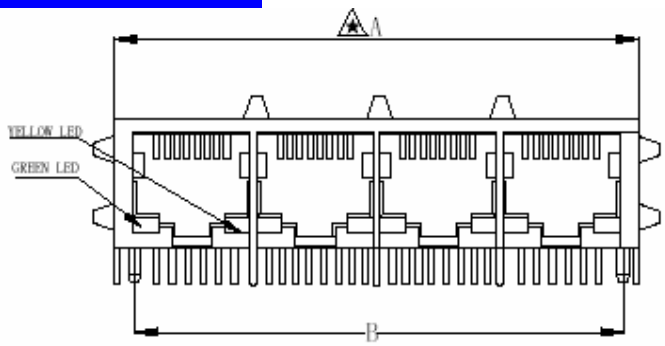

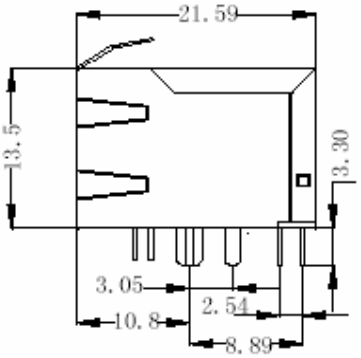

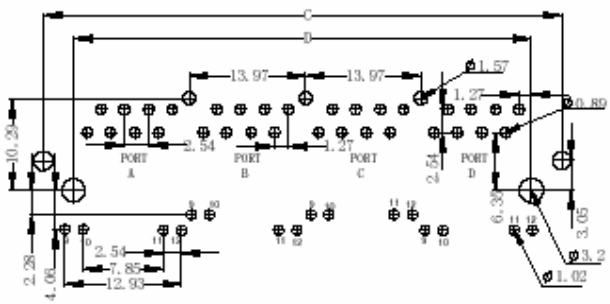

SUGGESTED PCB LAYOUT

1×X PORT	1×X PORT LENGTH			
1×2	A=31.28	B=25.4	C=30.93	D=25.4
1×4	A=59.18	B=53.34	C=58.93	D=53.34
1×6	A=87.07	B=81.28	C=86.82	D=81.28
1×8	A=115.0	B=109.2	C=114.8	D=109.2

TEL : +886-3-422-8279 FAX : +886-3-422-8734; E-mail : info@coilmaster.com.tw; http ://www.coilmaster.com.tw

10/100 Base-T RJ45 1XN
Tab-Down Jack
With Magnetic Module

Coilmaster Electronics Co., Ltd.

SHAPES AND DIMENSIONS

B(1xX, X=2,4,6,8)

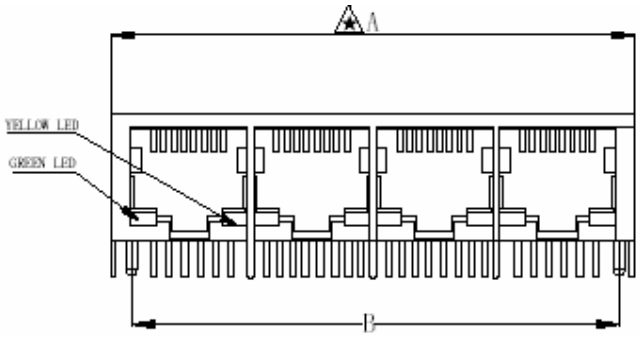

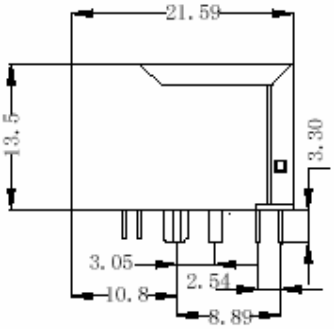

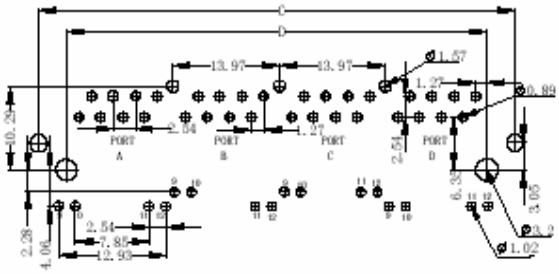

SUGGESTED PCB LAYOUT

1×X PORT	1×X PORT LENGTH			
1×2	A=31.28	B=25.4	C=30.93	D=25.4
1×4	A=59.18	B=53.34	C=58.93	D=53.34
1×6	A=87.07	B=81.28	C=86.82	D=81.28
1×8	A=115.0	B=109.2	C=114.8	D=109.2

C(1xX, X=2,4,6,8)

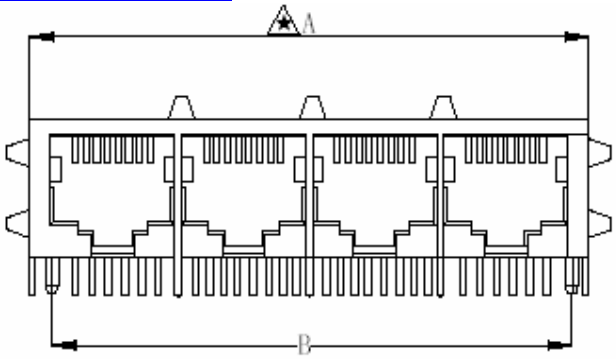

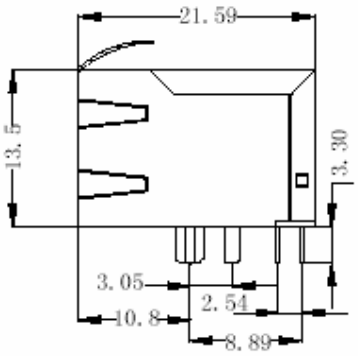

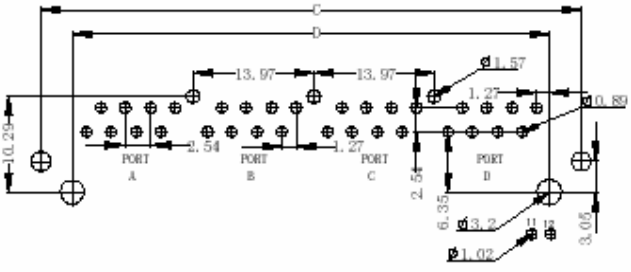

SUGGESTED PCB LAYOUT

1×X PORT	1×X PORT LENGTH			
1×2	A=31.28	B=25.4	C=30.93	D=25.4
1×4	A=59.18	B=53.34	C=58.93	D=53.34
1×6	A=87.07	B=81.28	C=86.82	D=81.28
1×8	A=115.0	B=109.2	C=114.8	D=109.2

SHAPES AND DIMENSIONS

D(1xX, X=2,4,6,8)

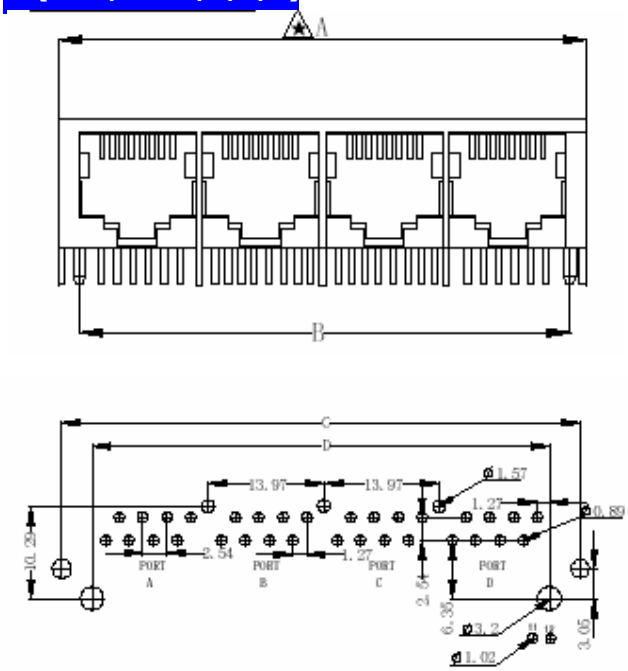

SUGGESTED PCB LAYOUT

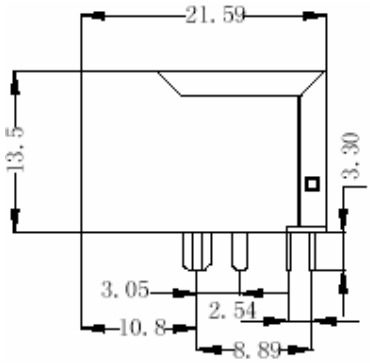

1×X PORT	1×X PORT LENGTH			
1×2	A=31.28	B=25.4	C=30.93	D=25.4
1×4	A=59.18	B=53.34	C=58.93	D=53.34
1×6	A=87.07	B=81.28	C=86.82	D=81.28
1×8	A=115.0	B=109.2	C=114.8	D=109.2

Dimensions: Inch/mm
Unless otherwise specified,
all tolerances are±.010/0.25

Schematics

RJ32X6201,X=2,4,6,8

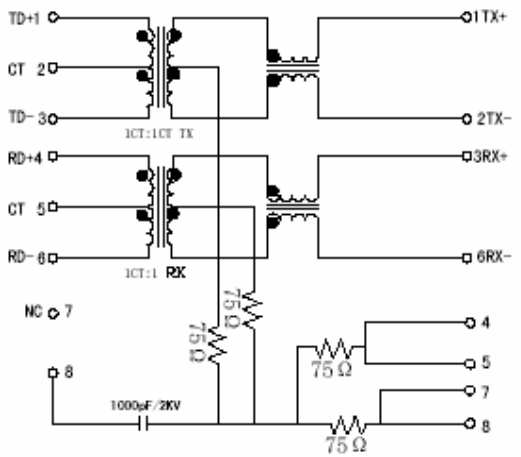

RJ32X6202,X=2,4,6,8

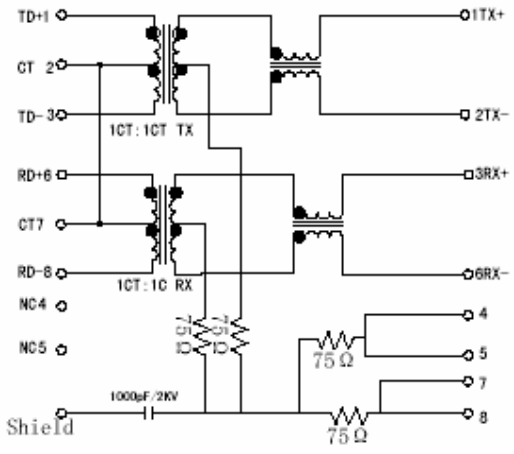

10/100 Base-T RJ45 1XN
Tab-Down Jack
With Magnetic Module

Coilmaster Electronics Co., Ltd.

Schematics

RJ32X6201,X=2,4,6,8

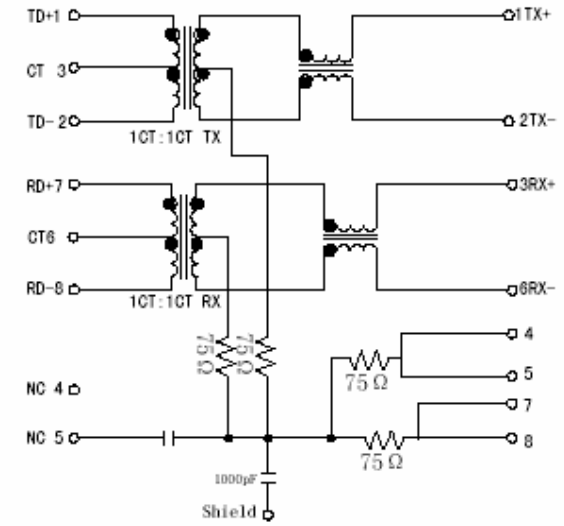

RJ32X6202,X=2,4,6,8

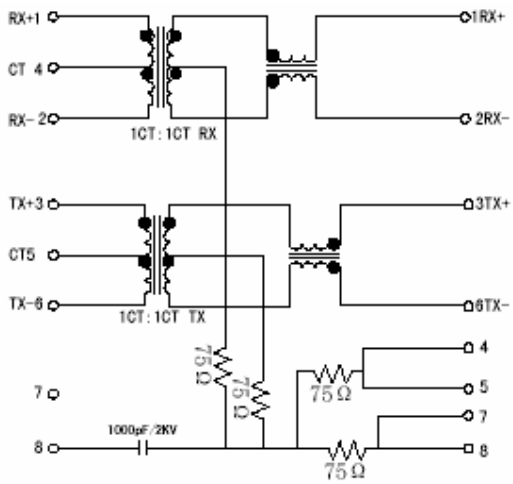

FEATURES

1. RJ45 1XN, Tab-Down 8 Pin with internal magnetics
2. **Available with and without LEDs**
3. Suitable for CAT 5 & 6 Fast Ethernet cable or better UTP
4. 350uH min. OCL with 8mA bias current
5. **RoHS compliant peak solder rating 235°C**

ELECTRICAL CHARACTERISTICS @ 25°C --- Operating Temperature 0°C to 70°C

PART NUMBER	Turns Ratios		Insertion Loss (dB typ.)	Return loss (dB typ) MHz			Crosstalk (dB Min) MHz			CMR (dB typ) MHz		Hipot (Vrms)
	TX	RX	0.1-100MHz	1-10	30	60-100	1-10	30-60	60-100	1-50	50-130	1-50
RJ32-X6201-LF	1CT:1CT	1CT:1CT	-1.2	-18	-16	-12	-40	-35	-30	-30	-20	1500
RJ32-X6202-LF	1CT:1CT	1CT:1CT	-1.2	-18	-16	-12	-40	-35	-30	-30	-20	1500
RJ32-X6203-LF	1CT:1CT	1CT:1CT	-1.2	-18	-16	-12	-40	-35	-30	-30	-20	1500
RJ32-X6204-LF	1CT:1CT	1CT:1CT	-1.2	-18	-16	-12	-40	-35	-30	-30	-20	1500