# 02-338F Series

## From 2.2µH to 6.8µH

## SPECIFICATIONS

*Irms: DC current (A) that will cause an approximate ΔT of 40°C.
**Isat: DC current (A) that will cause L0 to drop approximately 30%.

| Part Number | Inductance (µH) | L Test Freq. (KHz) | DCR Max. (mΩ) | *Irms Typ. (A) | **Isat Typ. (A) |
|---|---|---|---|---|---|
| 02-338F-2R2M | 2.2 | 100 | 76 | 3.5 | 4.0 |
| 02-338F-6R8M | 6.8 | 100 | 250 | 2.0 | 2.3 |

## PHYSICAL DIMENSIONS

| Size | A | B | C Max. | D | E |
|---|---|---|---|---|---|
| mm | 5.4±0.35 | 5.7±0.2 | 1.2 | 2.0±0.3 | 1.5±0.3 |
| inches | 0.21±0.014 | 0.22±0.008 | 0.05 | 0.08±0.012 | 0.06±0.012 |

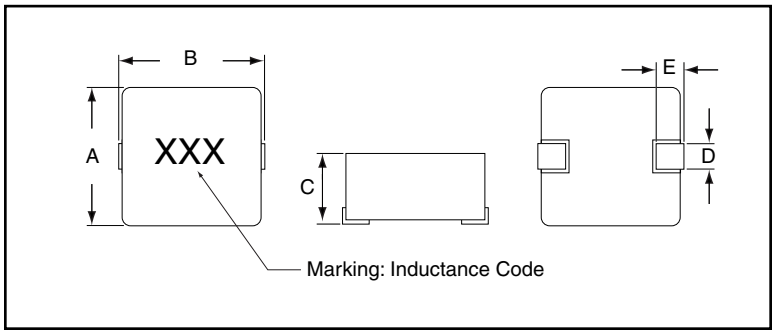


## CHARACTERISTICS

**Description:** SMD (shielded) power inductor.
**Applications:** PDA, Notebook, Desktop, Server applications, Low profile, high current power supplies, battery powered devices, DC/DC converter for Field Programmable Gate Array (FPGA).
**Operating Temperature:** -55°C to +125°C (including self - temperature rise)
**Inductance Tolerance:** ±20%
**Testing:** Inductance is tested on an HP4285A at 100KHz, 0.5V
**Packaging:** Tape & Reel.
**Marking:** Parts are marked with inductance code.
**Miscellaneous:** **RoHS Compliant.**
**Additional Information:** Additional electrical & physical information available upon request.
**Samples available. See website for ordering information.**

## PAD LAYOUT

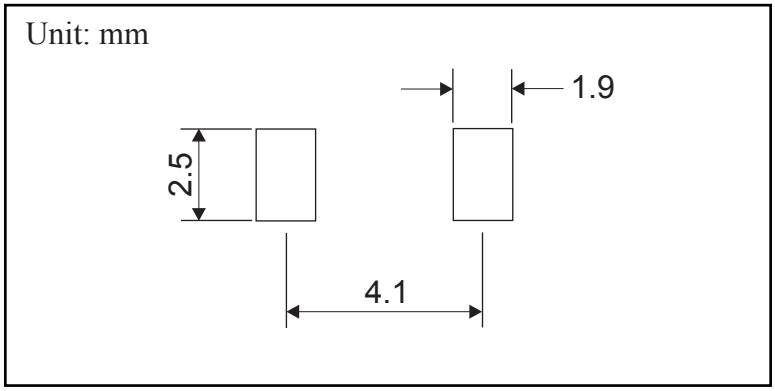



Copyright © 2013 by CT Magnetics, DBA Central Technologies. All rights reserved.
CT Magnetics reserves the right to make improvements or change specifications without notice