02-129F Series

From 1.0 µH to 1,000 µH

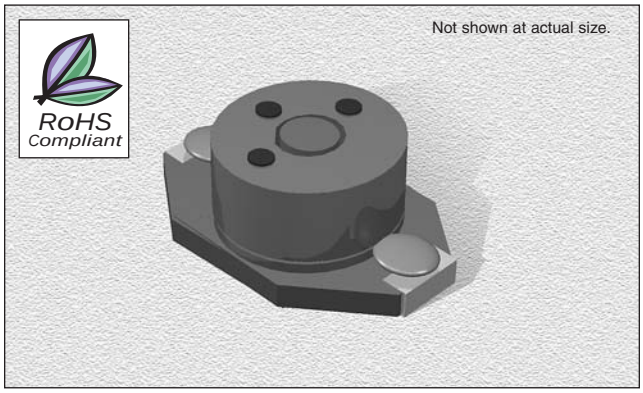

SPECIFICATIONS

Parts are available in ±20% tolerance only.

SPECIFICATIONS			SPECIFICATIONS					
Part Number	0 ADC Inductance (µH±20%)	DCR Max. (Ω)	SRF Typ. (MHz)	Inductance Rating (µH)	L Test Freq. (kHz)	Current Rating (A)	Max. Energy Storage (µJoules)	Max. Switch Freq.
02-129PF-102	1.0	.025	60	.50	100	5.0	9.0	1 MHz
02-129PF-152	1.5	.030	55	.70	100	5.0	12	1 MHz
02-129PF-222	2.2	.035	55	1.0	100	5.0	15	1 MHz
02-129PF-332	3.3	.040	50	1.5	100	5.0	16	1 MHz
02-129PF-472	4.7	.045	45	2.0	100	3.0	10	1 MHz
02-129PF-682	6.8	.050	40	4.0	100	2.5	14	1 MHz
02-129PF-103	10	.055	35	5.0	100	2.0	11	1 MHz
02-129PF-153	15	.060	25	6.0	100	1.8	12	1 MHz
02-129PF-223	22	.084	22	10	100	1.5	11	1 MHz
02-129PF-333	33	.090	18	12	100	1.3	13	1 MHz
02-129PF-473	47	.110	16	27	100	1.0	13	1 MHz
02-129PF-683	68	.150	12	40	100	.90	17	1 MHz
02-129PF-104	100	.290	9	50	100	.80	15	1 MHz
02-129PF-154	150	.360	8	80	100	.60	15	500 kHz
02-129PF-224	220	.390	6	90	100	.50	10	500 kHz
02-129PF-334	330	.730	5	150	100	.40	13	500 kHz
02-129PF-474	470	.880	4	200	100	.35	13	500 kHz
02-129PF-684	680	1.15	3	300	100	.30	13	500 kHz
02-129PF-105	1000	1.45	2.5	420	100	.25	13	500 kHz

CHARACTERISTICS

Description: SMD (shielded) power inductor
Applications: Ideal for high performance DC/DC converter applications, computers, LCD displays and telecommunication equipment. Especially those requiring shielding
Operating Temperature: -40°C to +85°C
Inductance Tolerance: ±20%
Testing: Inductance is tested on an HP4285A at 100 kHz
Packaging: Tape & Reel
Marking: Color dots OR Suffix Code
Miscellaneous: RoHS Compliant. Magnetically shielded
Additional Information: Higher current parts available. Additional electrical & physical information available upon request
Samples available. See website for ordering information.

PHYSICAL DIMENSIONS

Size	A Max.	B Max.	C Max.	D	E	F
mm	12.95	9.4	5.08	2.54	2.54	7.62
inches	0.51	0.37	0.2	0.1	0.1	0.3

Parts will be marked with
Significant Digit Dots or Suffix Code

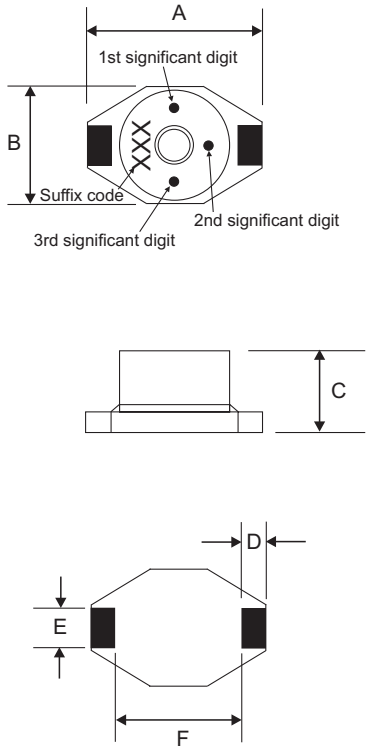

PAD LAYOUT

Unit: mm

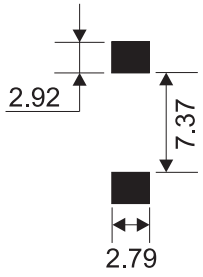

01.12.10

Copyright © 2010 by CT Magnetics, DBA Central Technologies. All rights reserved.
CT Magnetics reserves the right to make improvements or change specifications without notice
CENTRAL TECHNOLOGIES